ENDURANCE®
by Body-Solid

FB300

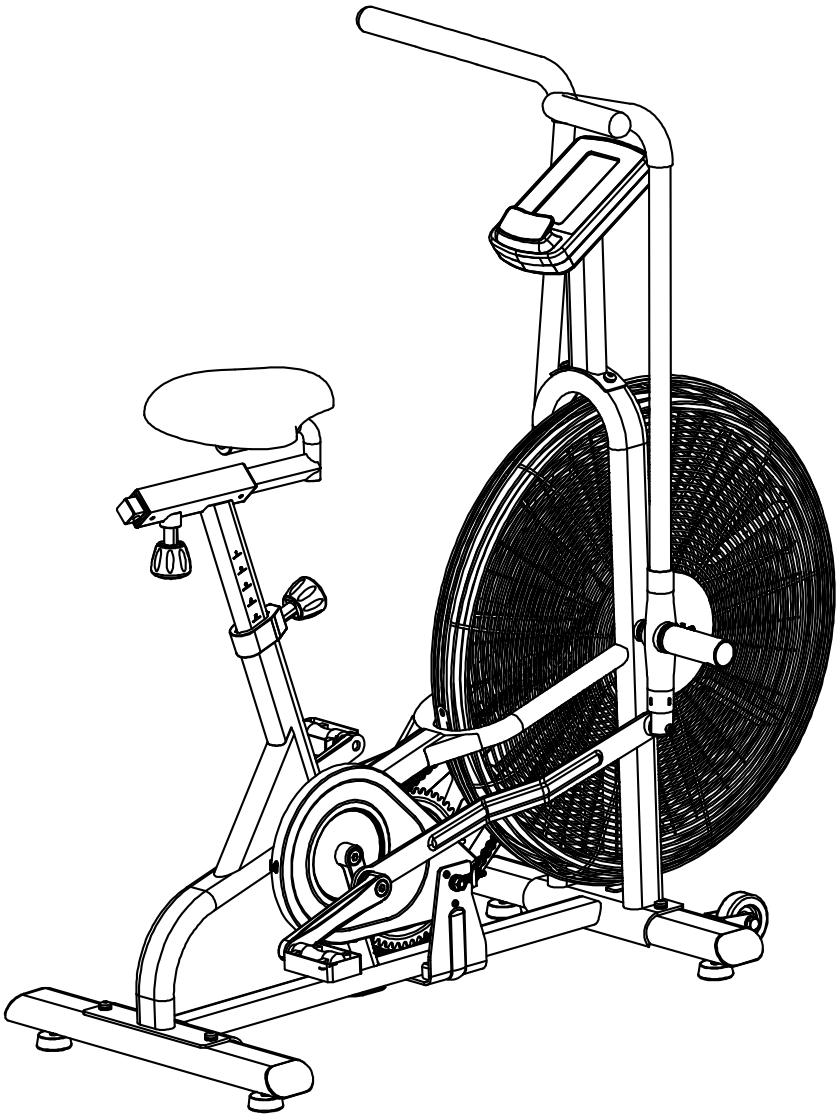

Endurance® FB300 Fan Bike

User Manual

V. FB300-020918

Table of Contents

Table of Contents..... 2
Introduction..... 3
Important Safety Information..... 4
Before You Begin..... 5
Assembly..... 6 - 13
Setting up FB300..... 14
Dimension..... 15
Console Overview..... 16 - 18
Console Operation..... 19 - 22
Monitoring Your Heart Rate..... 23 - 24
Chest Strap Operation..... 25
General Maintenace..... 26
Troubleshooting Guide..... 27
Stretching & Flexibility..... 28
Warm-Up/Cool Down Exercises..... 29 - 35
Parts & Hardware List..... 36 - 38
Exploded Drawing..... 40 - 41

Endurance® continually seeks ways to improve the performance, specifications and product manuals in order to ensure that only superior products are released from our factories. Please take the time to carefully read through this manual thoroughly. Instructions contained in this document are not intended to cover all details or variations possible with Endurance® equipment, or to cover every contingency that may be met in conjunction with installation, operation, maintenance or troubleshooting of the equipment. Even though we have prepared this manual with extreme care, neither the publisher nor the author can accept responsibility for any errors in, or omission from, the information given. Should additional information be required, or should situations arise that are not covered by this manual, the matter should be directed to your local Endurance® representative, or the Service Department at Endurance® in Forest Park, Illinois.

© Copyright 2012. Endurance®. All rights reserved. Endurance® reserves the right to change design and specifications when we feel it will improve the product. Endurance® machines maintain several patented and patent pending features and designs. All rights reserved on all design patents and utility patents.

Congratulations!!

Thank you for purchasing your new Endurance® Fan Bike.

Using state-of-the-art techniques, robust frame structure and superior ergonomic design, Endurance® Fan Bike set a new standard for excellence. The Endurance® Fan Bike can improve your quality of life by keeping you fit and healthy, increasing your energy levels and enhancing your lifestyle.

Endurance® wants to ensure years of quality workouts with your new Fan Bike so we recommend that you read this manual carefully and thoroughly to fully understand proper use and maintenance of this product. Retain this Owner's Manual for future reference.

Please use this Owner's Manual to make sure that all parts have been included in your shipment. When ordering parts, you must use the part number and description from this Owner's Manual. Use only Endurance® replacement parts when servicing this machine. Failure to do so will void your warranty and could result in personal injury.

For information about product operation or service, check out the official Endurance® website at www.bodysolid.com/Home/Endurance_Cardio or contact an authorized Endurance® dealer or an Endurance® factory-authorized service company or contact Endurance® Customer Tech Support at one of the following:

Toll Free: 1-800-556-3113
Phone: 1-708-427-3555
Fax: 1-708-427-3556
Hours: M-F 8:30-5:00 CST
E-Mail: service@bodysolid.com

Or write to:

Endurance® Service Department
1900 S. Des Plaines Ave.
Forest Park, IL 60130 USA

Important Safety Information

Save this Owner's Manual!

Before beginning any fitness program, you should obtain a complete physical examination from your physician.

When using exercise equipment, you must always take basic precautions, including the following:

- Read all instructions before using your Endurance® Fan Bike. These instructions are written to ensure your safety and to protect the unit.
- DO NOT allow children on or near the equipment.
- Use the equipment only for its intended purpose as described in this guide.
- DO NOT use accessory attachments that are not recommended by the manufacturer. Such attachments might cause injuries and will void your warranty.
- Wear proper exercise clothing and shoes for your workout, no loose clothing.
- DO NOT use cleats, spikes or any other non-athletic shoes.
- DO NOT use this product while barefoot or wearing only socks.
- Use care when getting on or off the unit.
- DO NOT overexert yourself or work to exhaustion. If you experience any pain such as chest pains, nausea, dizziness, shortness of breath or abnormal symptoms, stop your workout immediately and consult your physician before continuing.
- Never operate the unit when it has been dropped or damaged. Return the equipment to a service center for examination and repair.
- Never drop or insert objects into any opening in the equipment.
- Always check the unit for loose components before each use.
- DO NOT turn pedals by hand.
- DO NOT use the equipment outdoors or near water. It is imperative that your Endurance® Fan Bike is used in a climate controlled environment. If your Fan Bike has been exposed to colder temperatures or to high moisture climates, it is strongly recommended that the Fan Bike is brought to room temperature before use. Failure to use this equipment in a climate controlled environment may cause premature electronic failure.
- Endurance® recommends that a mat is placed under the unit to protect the floor or carpet and for easier cleaning.

Endurance® Fan Bikes are designed for your enjoyment. By following these precautions and using common sense, you can have many safe and pleasurable hours of healthful exercise with your Endurance® Fan Bike.

Before You Begin

The Endurance® FB300 is carefully tested and inspected before shipment. We have shipped the unit in several pieces that require assembly. Carefully unpack the unit in a clear area and lay the pieces on the floor near the area where you plan to use the equipment. Remove the packing material. Do not dispose of the packing material until assembly is complete and the unit is working properly. Place the unit on a clean level surface for assembly. Before assembling, the unit should be placed as close as possible to its final location. *Be careful to assemble all components in the sequence presented in this guide.*

PERSONAL SAFETY DURING ASSEMBLY

- It is strongly recommended that a qualified dealer assemble the equipment. *Assistance is required.*
- Before beginning assembly, please take the time to read the instructions thoroughly.
- Read each step in the assembly instructions and follow the steps in sequence. *Do not skip ahead.* If you skip ahead, you may learn later that you have to disassemble components and that you may have damaged the equipment which will void the warranty.
- Assemble and operate the Endurance® Fan Bike on a solid, level surface.
  Locate the unit a few feet from the walls or furniture to provide easy access.

AFTER ASSEMBLY

Once the unit is assembled, you should check all functions to ensure correct operation. If you experience problems, first recheck the assembly instructions to locate any possible errors made during assembly. If you are unable to correct the problem, call the dealer from whom you purchased the machine or call Endurance® Customer Tech Support Hot Line Toll Free at: 1-800-556-3113.

Step 1

NOTE:
Some hardware components may be pre-assembled. Be aware of Nylon lock nuts not fully screw onto bolts, they must be tightened with a wrench to ensure proper engagement.

1A. Attach Front Stabilizer (M) to Main Frame (A) using:
Two M8x20mm Button Head Cap Screws (#5)
Two M8 Lock Washers (#6)
Two M8 Washers (#7)

1B. Attach Rear Stabilizer (N) to Main Frame (A) using:
Two M8x20mm Button Head Cap Screws (#5)
Two M8 Lock Washers (#6)
Two M8 Washers (#7)

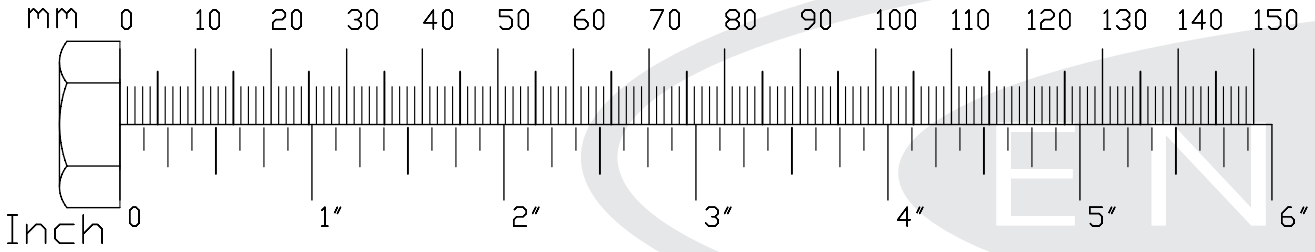

Above shows STEP 1 assembled and completed.

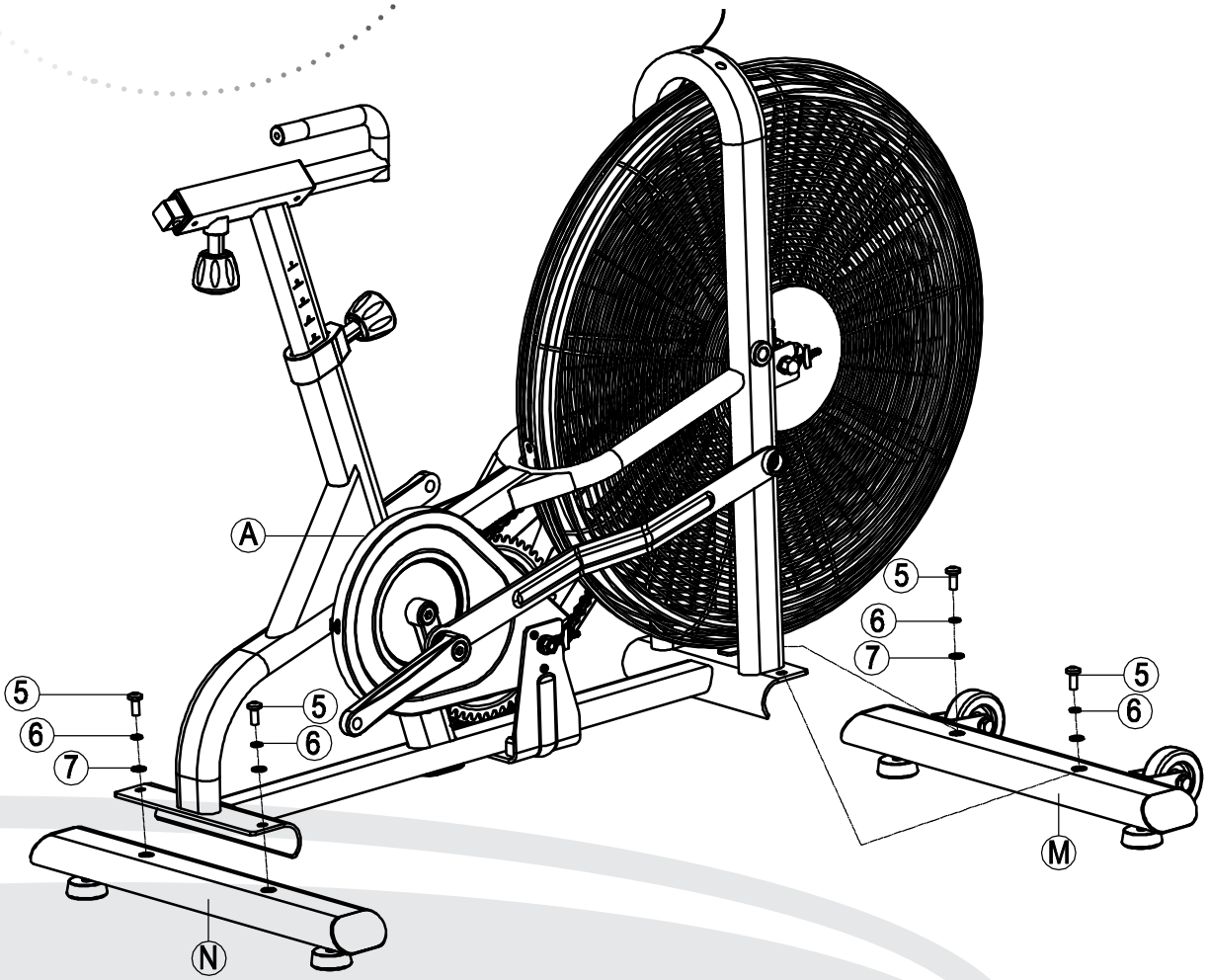

Step 2

NOTE:
Some hardware components may be pre-assembled. Be aware of Nylon lock nuts not fully screw onto bolts, they must be tightened with a wrench to ensure proper engagement.

2A. Attach the Handle Bars (E & F) into the Main Frame (A) by threading Handle Bar Pivot Shafts (#21). Tighten the Handle Bar Pivot Shaft (#21) by Inserting the Allen Wrench into the hole of the Foot Peg and turn clockwise.

2B. Attach the Handle Bars (E & F) to the Linkages (H) using:
Two M8x45mm Shoulder Bolts (#14)
Two M8 Hex Nut (#15)
Two M8 Nylon Lock Nut (#17)

2C. Insert Seat(#3) onto the knurled section of the Horizontal Seatpost (D) and tighten the clamp of the Seat (#3).

2D. Put Washer (#28) onto the M8x15mm Button Head Cap Screw (#27) and thread the screw (#27) into the end of the Horizontal Seatpost (D).

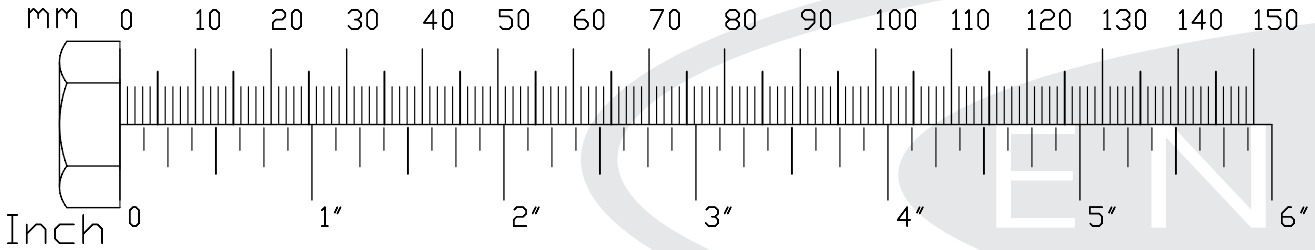

Step 2

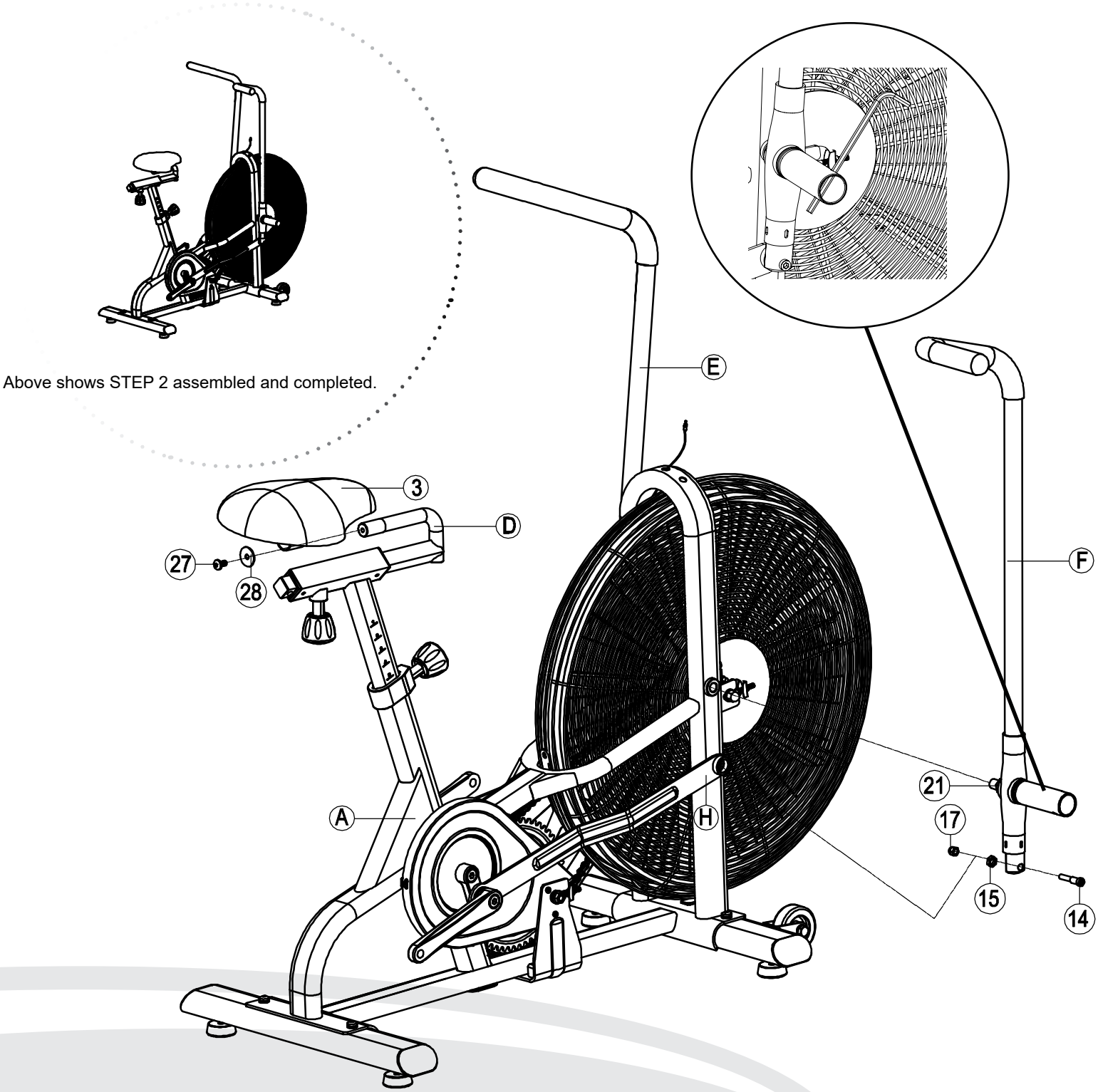
Above shows STEP 2 assembled and completed.
E
3
D
27
28
F
21
17
15
14
A
H

Step 3

NOTE:
Some hardware components may be pre-assembled. Be aware of Nylon lock nuts not fully screw onto bolts, they must be tightened with a wrench to ensure proper engagement.

3A. Screw (counterclockwise) Left Pedal (P) onto Left Crank (#1).

3B. Screw (clockwise) Right Pedal (Q) onto Right Crank (#2).

Note: Make sure the Pedals are wrench tightened.

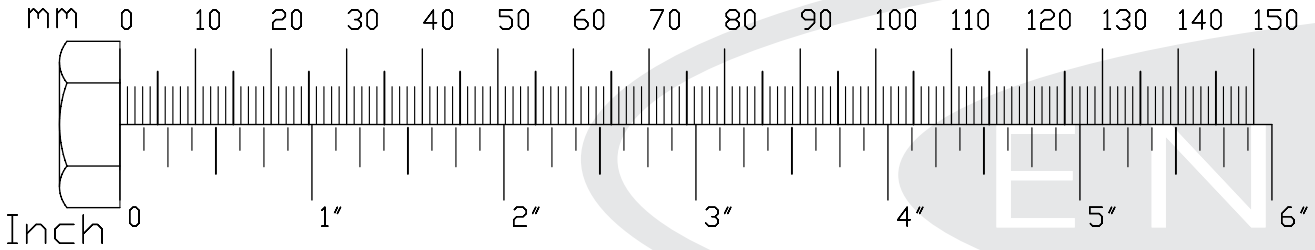

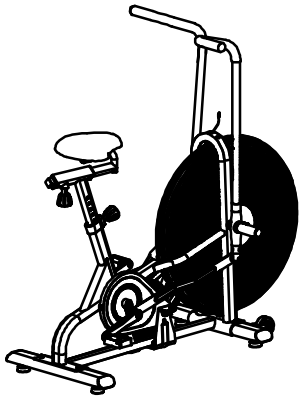

Above shows STEP 3 assembled and completed.

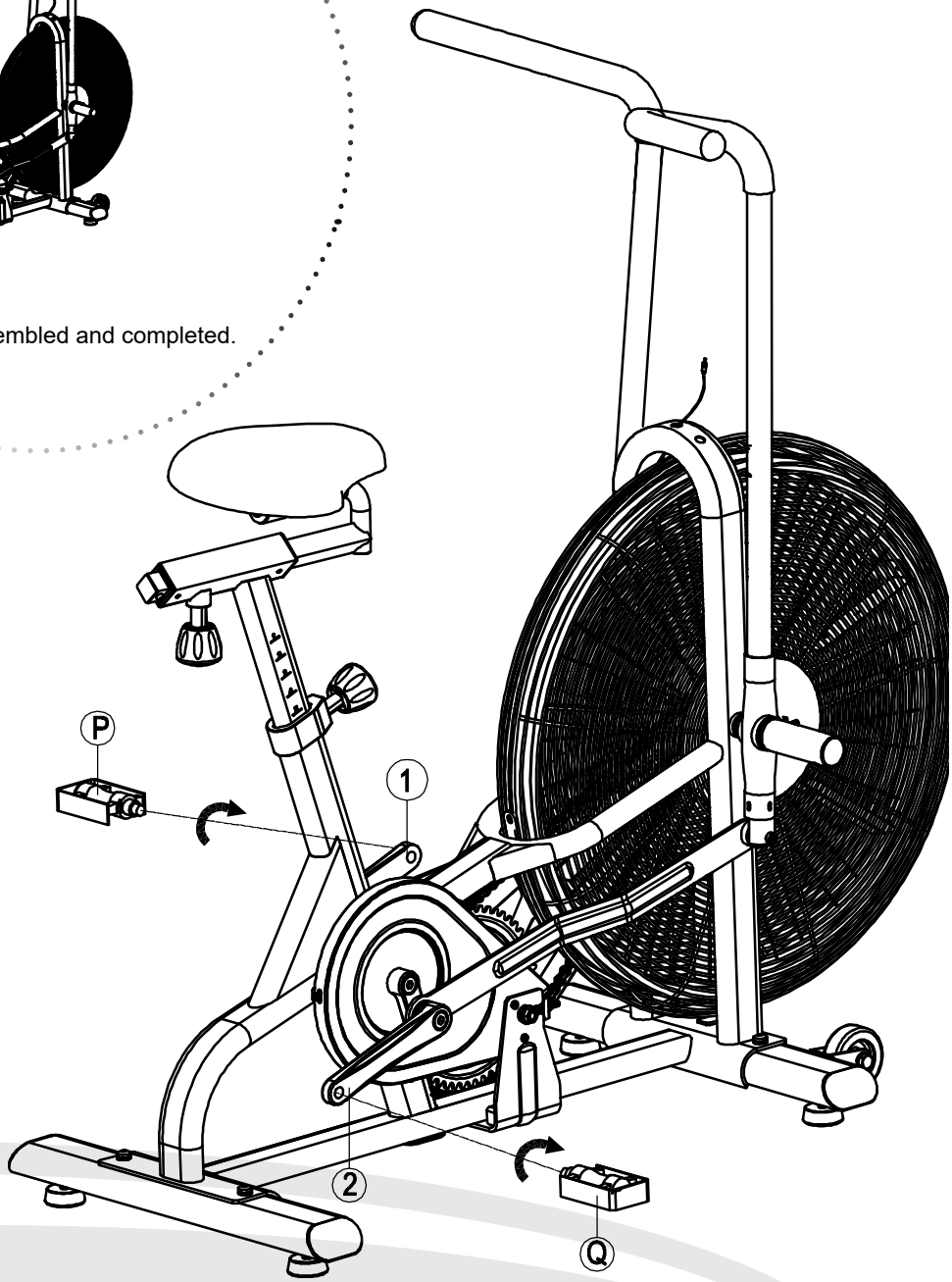

Step 4

NOTE:
Some hardware components may be pre-assembled. Be aware of Nylon lock nuts not fully screw onto bolts, they must be tightened with a wrench to ensure proper engagement.

4A. Feed the Speed Sensor Cable (#30) through the Upright (B).

4E. Attach the Upright (B) to Main Frame (A) using:
Two M8x20mm Button Head Cap Screws (#5)
Two M8 Lock Washers (#6)
Two M8 Washers (#7)

4F. Connect Cable (#30) to the Console (S)

4G. Attach the Console (S) to Upright (B) using:
Four M5x10mm Phillips Screws (#29)

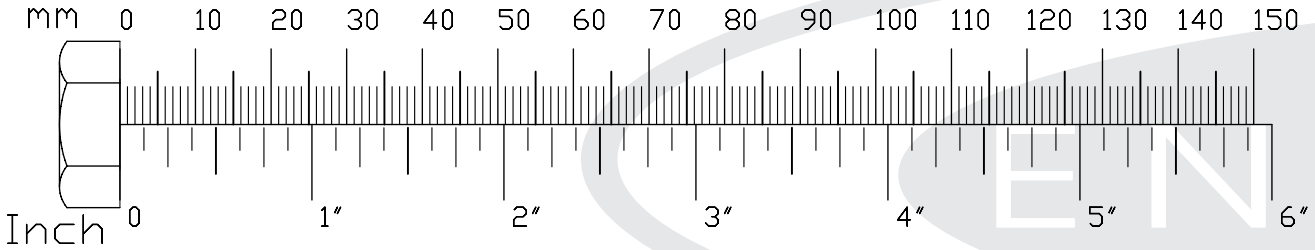

Step 4

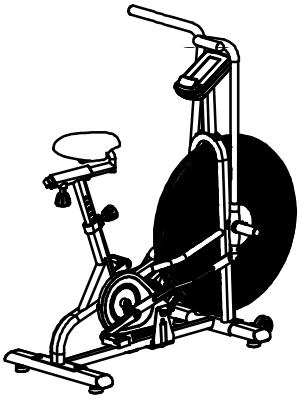

Above shows STEP 4 assembled and completed.

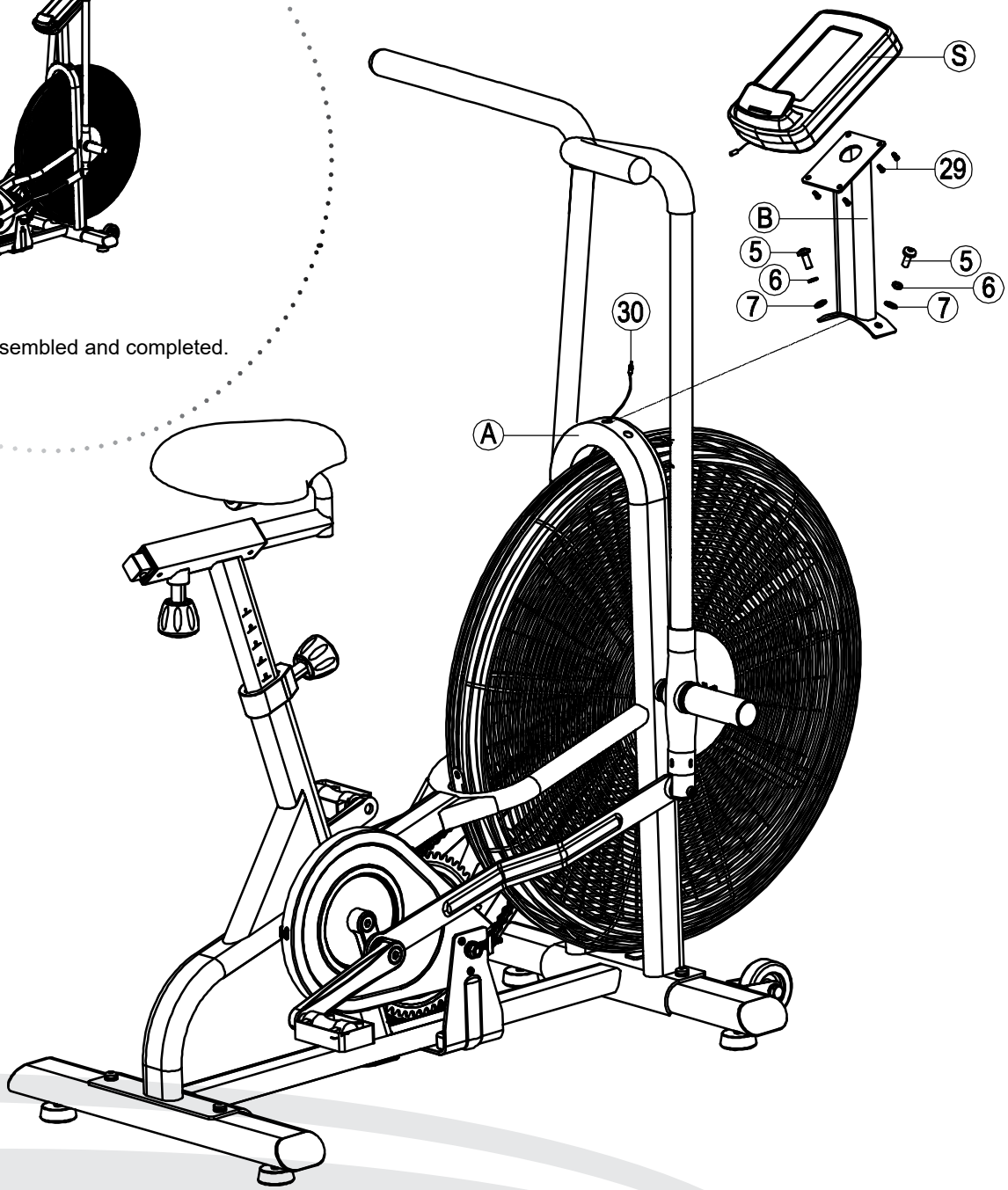

SETTING UP FB300

PLACEMENT IN YOUR HOME

To make exercise a desirable daily activity for you, the FB300 should be placed in a comfortable and attractive setting. This Bike is designed to use minimal floor space and to fit nicely in your gym/home.

- Do not place or operate the FB300 outdoors.
- Do not place the FB300 near water or in high moisture content environment.
- It is highly recommended to place a dedicated equipment mat beneath your FB300. A dedicated mat provides superior stability and firmness for a proper workout.

MOVING THE FB300

This Bike is easy to move around safely.
To move the FB300:

1. Grasp the back end Frame
2. Simply roll the FB300 on its two wheels to the desired location.

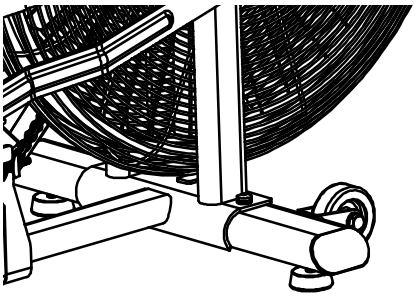

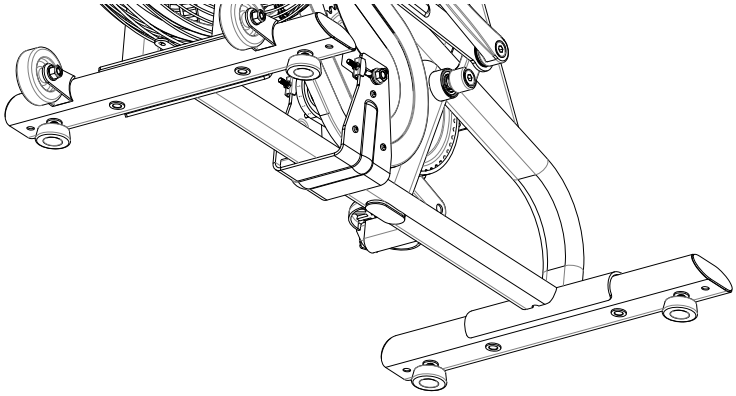

LEVELING THE FB300

There are four Levelers can be used to level the FB300:

1. Rotate the Adjustable Feet clockwise or counter-clockwise to adjust the level of the Bike.

END

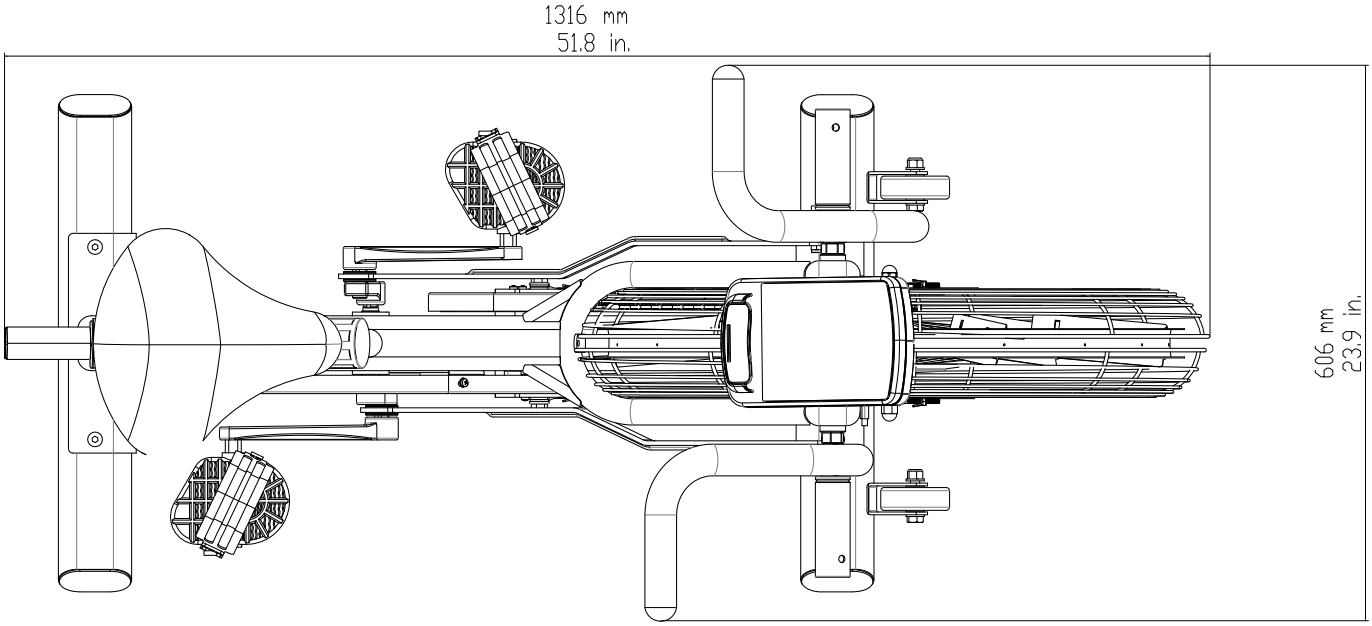
1316 mm
51.8 in.
606 mm
23.9 in.

Console Overview

Take a few moments to review the console layout.

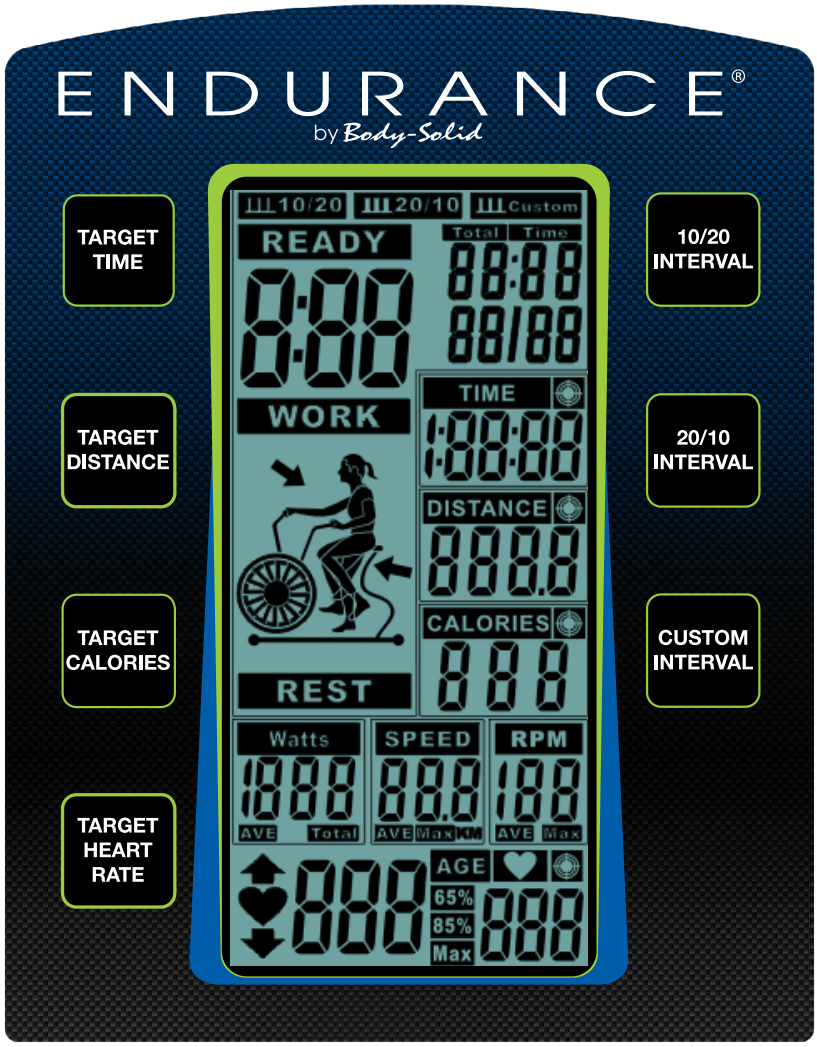

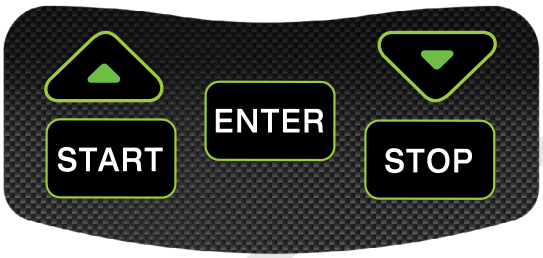

CONSOLE SCREEN DISPLAY

Interval Display

The top part will signal which interval program (10/20, 20/10 or Custom) is currently running. The graphic will show whether the workout is at Work or Rest Period.
The Total Time will count up the total workout time.
The Large Numericl display will count the current Work or Rest time.
The 88/88 will know the current interval and the total number of intervals during the workout.

Time

It shows the total elapsed time or remaining time based on the current program.

Distance

It shows the total distance in Miles or Kilometers based on console setting.

Calories

It shows the total or count down calories base on the program

Watts/Speed/RPM

Watts: It shows the amount of power generated at any moment during the workout.
Speed: It shows the current speed in miles per hour or kilometers per hour during the workout.
RPM: It shows revolution per minute during the workout.

Heart Rate

When the user's heart rate signal is detected via the wireless chest strap, the user's current heart rate will be displayed on the bottome left side of the screen.
When the Target Heart Rate program is selected, 65% and 85% will display altenatively.

CONSOLE BUTTONS

Quick Program Buttons

The Quick Program buttons allows the user to launch a program quickly.
The programs are TARGET TIME, TARGET DISTANCE, TARGET CALORIES, TARGET HEART RATE, 10/20 INTERVAL, 20/10 INTERVAL, CUSTOM INTERVAL.

Up & Down Buttons

The Up and Down arrow buttons are for adjusting values in both program and setup modes.

Start Button

Press the Start Button in the Setup Mode will start the program or resume the program in Stop Mode.

Stop Button

Press the Stop Button during the Workout Mode will end the program.
Press the Stop Button for 2 seconds will reboot the console.

Enter Button

The Enter button will confirm the selection in the setup mode.

INITIAL SETUP

Metric & Standard Unit: The initial factory setting is in "Miles". To toggle between Miles and Kilometers, press and hold "START" & "ENTER" buttons for 2 seconds. Press "UP" or "DOWN" arrows to select KM or ML and then press "ENTER" to confirm.

Battery Installation: Console operates on two AA batteries. The battery compartment is on the back of the console.

MODES

Standby Mode: When Powered on and RPM signal is detected, the console beeps and then goes to Standby Mode. If no other button is pressed, it will go Quick Start Mode automatically.

Sleep Mode: When RPM Signal or Data is not detected for 60 seconds, it will automatically enter Sleep Mode.

Reset Mode: Press "STOP" for 2 seconds, Console will run a "TOTAL RESET".

Pause Mode: Press the Start" Button during the Workout Mode will Pause the program.

End Mode: Press "STOP" button once, it will end the program and post the workout sumary.

QUICK PROGRAMS

There are eight Quick Programs **(QUICK START, 10/20 INTERVAL, 20/10 INTERVAL, CUSTOM INTERVAL, TARGET TIME, TARGET DISTANCE, TARGET CALORIES, TARGET HEART RATE)** to choose from. The workout summary will be display at the end of workout or press the "STOP" button.

QUICK START

This program allows the user to start the workout immediately as soon as the user starts to pedal without pressing any button. TIME, DISTANCE & CALORIES will count up.

INTERVAL 10/20

This program has a total of 8 Intervals with work interval time of 10 seconds and rest interval time of 20 seconds.
To start the program, press the "10/20 INTERVAL" button to launch the program at anytime during the workout.

INTERVAL 20/10

This program has a total of 8 Intervals with work interval time of 20 seconds and rest interval time of 10 seconds.
To start the program, press the "20/10 INTERVAL" button to launch the program at anytime during the workout.

CUSTOM INTERVAL

This program allows the use to set the total number of Intervals, work interval time, and rest interval time.
To start the program,

1. Press the "CUSTOM INTERVAL" button to launch the program at anytime during the workout.
2. Press the "UP" or "DOWN" buttons to adjust the number of intervals and then press the "ENTER" button to confirm the value.

3. Press the "UP" or "DOWN" buttons to adjust the work interval time and then press the "ENTER" button to confirm the value.
4. Press the "UP" or "DOWN" buttons to adjust the rest interval time and then press the "ENTER" button to confirm the value.
5. Time counts down from 3 to start the program.

TARGET TIME

This program allows the use to set the target time for the workout.
To start the program,

1. Press the "TARGET TIME" button to launch the program at anytime during the workout.
2. Press the "UP" or "DOWN" buttons to adjust the workout time and then press the "ENTER" button to confirm the value.

TARGET DISTANCE

This program allows the use to set the target distance for the workout.
To start the program,

1. Press the "TARGET DISTANCE" button to launch the program at anytime during the workout.
2. Press the "UP" or "DOWN" buttons to adjust the workout distance and then press the "ENTER" button to confirm the value.

TARGET CALORIES

This program allows the use to set the target calories for the workout.
To start the program,

1. Press the "TARGET CALORIES" button to launch the program at anytime during the workout.
2. Press the "UP" or "DOWN" buttons to adjust the workout calories and then press the "ENTER" button to confirm the value.

TARGET HEART RATE

This program allows the use to set the target heart rate for the workout. A wireless heart rate strap must be worn in order to detect the user's heart rate. The program will actomatically calculate the maximum, 65% & 85% of the heart rate based on the user's age.

To start the program,

1. Press the "TARGET HEART RATE" button to launch the program at anytime during the workout.
2. Press the "UP" or "DOWN" buttons to adjust the Age and then press the "ENTER" button to confirm the value.
3. If the user's heart rate is below 65% of the maximum, The "UP ARROW" and "65%" graphics on the display will flash to indicate the user will need to pedal faster to achieve higher heart rate.
4. If the user's heart rate is above 85% of the maximum, The "DOWN ARROW" and "85%" graphics on the display will flash to indicate the user will need to slow down lower the heart rate.

Monitoring Your Heart Rate

To obtain the greatest cardiovascular benefits from your exercise workout, it is important to work within your target heart rate zone. The American Heart Association (AHA) defines this target as 50% -85% percent of the Maximum Heart Rate.
The Maximum Heart Rate may be roughly calculated by subtracting the user's age from 220.

The Maximum Heart Rate and aerobic capacity naturally decreases as the user ages. This may vary from one person to another, but use this number to find your approximate effective target zone. For example, the Maximum Heart Rate for an average 40 year-old is 180 bpm. The target heart rate zone is 50%-85% of 180 or 90-153 bpm. See the **FITNESS SAFETY** section on page 24.

Before beginning a workout, check the normal resting heart rate. The user can place their fingers lightly against the neck or wrist over the main artery. After finding the pulse, count the number of beats in 10 seconds. Multiply the number of beats by six to determine your pulse rate per minute. It is recommend to take a heart rate measurement at rest, after warming up, during the workout and two minutes into cooling down after the workout, to accurately track progress as it relates to better fitness.

During your first several months of exercising, the AHA recommends aiming for the lower part of the target heart rate zone - 50%, then gradually progressing up to 75%. According to the AHA, exercising above 85% of the Maximum Heart Rate may be too strenuous unless the user is in top physical condition. Exercising below 60% of the maximum will result in minimal cardiovascular conditioning.

CHECK YOUR PULSE RECOVERY RATE

If your pulse is over 100 bpm five minutes after stopping exercising, or if it's higher than normal the morning after exercising, the user's exertion may have been too strenuous for their current fitness level. Rest and reduce the intensity next time.

Monitoring Your Heart Rate

FITNESS SAFETY

The Heart Rate chart indicates average rate zones for different ages. A variety of different factors (including medication, emotional state, temperature and other conditions) can affect the target heart rate zone that is best for you. Your physician or health care professional can help you determine the exercise intensity that is appropriate for your age and condition.

(MHR) = *Maximum Heart Rate*
(THR) = *Target Heart Rate*

220 - Age = *Maximum Heart Rate (MHZ)*
MHZ x .60 = *60% of your Maximum Heart Rate.*
MHZ x .75 = *75% of your Maximum Heart Rate.*

For example, if you are 30 years old, your calculations will be as follows:
220 - 30 = 190
190 x .60 = 114 (Low End or 60% of MHZ)
190 x .75 = 142 (High End or 75% of MHZ)
30 Year-Old (THR) Target Heart Rate would be 114-142

Maximum Heart Rate (MHR) Calculation

HEART RATE TRAINING ZONE						
MAX	BEATS PER MINUTE					
85%	170	161	153	144	136	128
70%	140	133	126	119	112	105
60%	120	114	108	102	96	90
AGE	20	30	40	50	60	70

Heart Rate Training Zone Chart

END

Chest Strap Operation

Your Endurance® Fan Bike has the capability to determine Heart Rate with the use of a Heart Rate Chest Strap. A Heart Rate Chest Strap can be purchased seperately. In all Heart Rate Control programs, the console only accepts the heart rate signal from the chest strap transmitter while the pulse grip heart rate function is disabled. The requirement to wear the chest strap is due to the superior accuracy of a chest strap transmitter compared to the pulse grip sensors.

It is suggested for the Chest Strap Transmitter that you position the transmitter as close to your heart as possible, against the skin, 1-2 inches below the pectoral muscles. For best results, moisten the back of the transmitter for better contact.

If no Heart Rate signal is detected for 10 seconds, the screen will show "0" Heart Rate

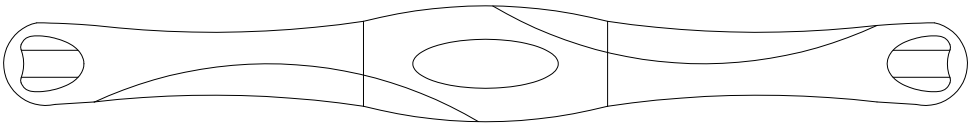

HR Chest Strap for Endurance® models

SAFETY PRECAUTIONS AND TIPS FOR CHEST STRAP

1. It is the owner's responsibility to ensure that all users of this unit have read the Owner's Manual and are familiar with warnings and safety precautions.
2. Do not place chest strap near devices that generate large magnetic fields. TV sets, electric motors, radios, and high voltage power lines can affect the transmitter's performance. These items can interfere with the heart rate signal and possibly affect the heart rate readings on the console.
3. Handle the Chest Strap with care. Dropping the transmitter might cause damage that could void the warranty.
4. Do not use the chest strap if you have a cardiac pacemaker or if your are taking medications for a heart condition. Medication or electrical pulses from the pacemaker can interfere with accurate heart rate readings.
5. Do not bend the strips inside the chest strap. This can cause the chest strap to loose conductivity.
6. The chest strap has batteries that need to be replaced periodically. A faulty battery can cause inaccurate reading.

General Maintenace

Your Endurance® FB300 Exercise Fan Bike has been manufactured to withstand many hours of use with minimal maintenance. Here are some maintenance tips to keep your Endurance® FB300 Exercise Fan Bike at its best.

CLEANING
Periodically wipe down your machine with mild, soapy water or a diluted general purpose non-abrasive household cleaner. Cleaner should never be applied directly to any part of the equipment. Instead, place the non-abrasive cleaning solution on a soft cloth and wipe down the unit. The Exercise Bike should be wiped down to remove sweat after each use.

SQUEAKING NOISE
If squeaking noise occurs, it is most likely one of these three reasons:
1. The hardware is not sufficiently tightened durring assembly. Please check and tighthen all bolts.
2. The unit is not properly Leveled. There are four leveling pads on the front and rear stabilizers to adjust the level of the Bike.

END

Trouble Shooting Guide

Symptom	Possible Cause	Solution
Console has no power.	Console cable is not connected?	Verify that the console cable is connected properly.
	The console is faulty?	Call the Endurance® service number.
Strides/Min or Speed shows 0	Computer isn't receiving a signal from the sensor?	Check that the sensor magnet is correctly fitted and passes in front of the sensor.
		Check that all the computer plugs and sockets are correctly and firmly connected.
	The sensor is faulty?	If all above checks are O.K., then replace sensor.
	The computer is faulty?	Call the Endurance® service number.
No HR signal or incorrect HR signal	Computer is receiving a faint or intermittent pulse signal.	Check to make sure that the batteries in the chest strap are installed correctly.
		Replace the chest strap batteries.
		Check to see if the receiver is properly installed.
		Check to see if the chest strap is being properly worn by the user - if skin is extremely dry, then moisten contact points on chest with water and try again.
		If the problem still exists then call the Endurance® service number.
Noise from Bike	Loose hardware or dirt build up.	Check and tighten hardware
	Dirt build up.	Clean up the dirt
	The Problem still exists.	Call the Endurance® service number.

Any Questions?
Call the Customer Tech Hotline at:
1 (800) 556-3113

Stretching & Flexibility

Flexibility is an important component of physical fitness and needs to be addressed in a resistance training program. The two main purposes for stretching are injury prevention and a faster rate of recovery from exercise. Stretching should be performed in both the warm up and cool down phases of a training session. A good general guideline is that each workout session should be preceded by 5 to 15 minutes of general warm up, followed by 8 to 12 minutes of stretching, and concluded with 4 to 5 minutes of post-exercise stretching.

A regular stretching program will loosen muscle tissue, allowing an increased range of motion. This helps prevent micro-tears at the muscle-tendon junction. Almost 90% of all injuries from muscle strain occur at the muscle-tendon junction. Repeated injury at this junction can lead to a build-up of scar tissue, which impedes range of motion and adds stress to the joints.

Begin by stretching the major muscle groups first. Move in and out of your stretches with smooth, slow, controlled motion. Hold the stretch for at least 10 seconds when you feel you have reached your muscle's maximum distance. Do not use fast, hurried or reckless motions when stretching. Fast and bouncy motions will increase the risk of injury.

The most common and most popular type of stretching is the static stretching technique. This form of stretching involves voluntary, complete relaxation of the muscles while they are elongated. A static stretch is a constant, steady stretch in which the end position is held for 10 to 30 seconds. This technique is popular because it is easy to learn, effective, and accompanied by minimal soreness with the least risk of injury.

Ballistic stretching involves a bouncing or bobbing movement during the stretch. The final position in the movement is not held. Ballistic stretching is unpopular because of the increased amount of delayed muscle soreness and the possibility of injury during the stretching exercise. Ballistic stretching is not recommended.

A dynamic stretch involves flexibility during sport specific movements. Dynamic stretching is similar to ballistic stretching in that it utilizes movement, but dynamic stretching includes movements that may be specific to a sport or movement pattern. Dynamic stretching is most common among track and field athletes, but is also used in other sports, such as basketball and volleyball. An example of dynamic stretching would be a track sprinter performing high knees with an emphasis on knee height and arm action, not on horizontal speed.

The following pages show illustrations with descriptions of static stretching for warm up and post-exercise cool down. Remember... stretch your large muscle groups first and do all stretches in a smooth, slow, controlled manner.

END

UPPER BACK

Cross Arm in Front of Chest

MUSCLE(S) AFFECTED: *latissimus dorsi and teres major*

1. Stand or sit with the right arm slightly flexed (15° to 30°) and adducted across the chest.
2. Grasp the upper arm just above the elbow, placing the left hand on the posterior side of the upper arm.
3. Pull the right arm across the chest (toward the left) with the left hand; hold for 10 seconds.
4. Repeat with the left arm.

Stretching the upper back

Stretching the shoulders, chest and upper back

UPPER BACK

Arms Straight Up Above Head (Pillar)

MUSCLE(S) AFFECTED: *latissimus dorsi and wrist flexors*

1. Stand with arms in front of torso, fingers interlocked with palms facing each other.
2. Slowly straighten the arms above the head with palms up.
3. Continue to reach upward with hands and arms.
4. While continuing to reach upward, slowly reach slightly backward; hold for 10 seconds.

LOWER BACK

Spinal Twist (Pretzel)

MUSCLE(S) AFFECTED: *internal oblique, external oblique and spinal erectors*

1. Sitting with legs straight and upper body nearly vertical, place right foot on left side of left knee.
2. Place back of left elbow on right side of right knee, which is now bent.
3. Place right palm on floor 12 to 16 inches behind hips.
4. Push right knee to the left with left elbow while turning shoulders and head to the right as far as possible. Try to look behind the back. Hold for 10 seconds.
5. Repeat with left leg.

Stretching the lower back and sides

LOWER BACK

Semi-Leg Straddle

MUSCLE(S) AFFECTED: *spinal erectors*

1. Sitting, knees flexed 30 to 50 degrees, let the legs totally relax.
2. Point the knees outward; the lateral side of the knees may or may not touch the floor.
3. Lean forward from waist and reach forward with extended arms; hold position for 10 to 15 seconds.
4. Bending and relaxing legs decreases hamstring involvement and increases lower back stretch.

Stretching the lower back from a seated position

Rotational flexion of the neck

NECK

Look Right and Left

MUSCLE(S) AFFECTED: *sternocleidomastoid*

1. Stand or sit with head and neck upright.
2. Turn head to the right using a sub-maximal concentric contraction; hold for 10 seconds.
3. Turn head to the left using a sub-maximal concentric contraction; hold for 10 seconds.

NECK

Flexion and Extension

MUSCLE(S) AFFECTED: *sternocleidomastoid, suboccipitals and splenii*

1. Standing or sitting with head and neck upright, flex neck anteriorly (forward) by tucking chin in toward the chest; hold for 10 seconds.
2. If the chin touches the chest, try to touch lower on the chest with the chin.
3. Extend neck posteriorly (backward) by trying to touch the head to the trapezius; hold for 10 seconds.

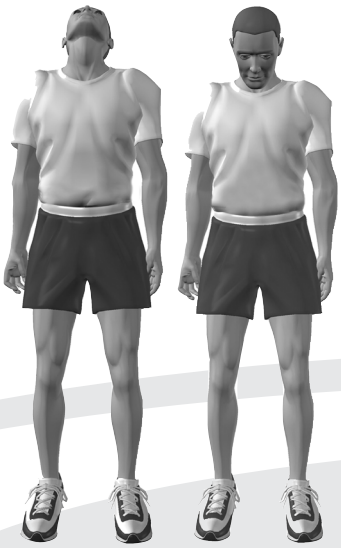

Neck Extension **Neck Flexion**

END

CHEST/SHOULDER

Straight Arms Behind Back

MUSCLE(S) AFFECTED: *deltoids and pectoralis major*

1. Standing, place both arms behind back.
2. Interlock fingers with palms facing each other.
3. Straighten arms fully.
4. Slowly raise the straight arms; hold for 10 to 15 seconds.
5. Keep head upright and neck relaxed.

Stretching shoulder joints and chest while standing

Stretching the sides, upper back and shoulders

SIDES

Side Bend with Straight Arms

MUSCLE(S) AFFECTED: *external oblique, latissimus dorsi and serratus anterior*

1. Stand with feet 14 to 16 inches apart.
2. Interlace the fingers with palms facing each other.
3. Reach upward with straight arms.
4. Keeping arms straight, lean from waist to left side. Do not bend knees.
5. After moving as far as possible; hold for 10 seconds.
6. Repeat to the left side.

SIDES

Side Bend with Bent Arms

MUSCLE(S) AFFECTED: *external oblique, latissimus dorsi , serratus anterior and triceps*

1. Stand with feet 14 to 16 inches apart.
2. Flex right arm and raise elbow above head.
3. Reach the right hand down toward the left shoulder.
4. Grasp the right elbow (just above the elbow) with the left hand.
5. Pull the elbow behind head.
6. Keeping arm bent, lean from waist to left side.
7. Do not bend knees.
8. After moving as far as possible; hold for 10 to 15 seconds.
9. Repeat with the left arm.

Stretching the sides, triceps and upper back

ANTERIOR OF THIGH AND HIP FLEXOR

Side Quadricep Stretch

MUSCLE(S) AFFECTED: *quadriceps and iliopsoas*

Stretching the quadriceps on side

1. Lie on left side with both legs straight.
2. Place left forearm flat on floor and upper arm perpendicular to floor.
3. Place left forearm at 45° angle with torso.
4. Flex right leg with heel of right foot moving toward buttocks.
5. Grasp front of ankle with right hand and pull toward buttocks.
   WARNING: Do not pull on ankle so hard that pain or discomfort is felt in knee.
6. Move knee backward and slightly upward. The stretch occurs not so much from the excessive flexion of the knee but from moving the knee back and slightly up; hold for 10 to 15 seconds.
7. Repeat with the left leg.

Stretching the quadriceps kneeling

ANTERIOR OF THIGH AND HIP FLEXOR

Kneeling Quadriceps Stretch

MUSCLE(S) AFFECTED: *quadriceps*

1. Kneel with the balls of the feet on the ground.
2. Keep hips straight (upper leg and torso should be in a straight line).
3. Place palms of hands on buttocks and push slightly forward.
4. With a straight body, lean slightly backward until developmental stretch is felt in quadriceps; hold for 10 to 15 seconds.

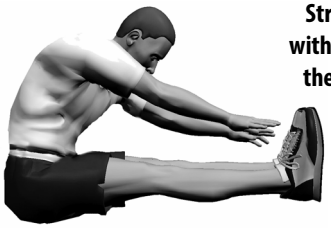

Stretching the hamstrings with emphasis on insertion of the hamstrings and calves.

POSTERIOR OF THIGH

Sitting Toe Touch

MUSCLE(S) AFFECTED: *hamstrings, spinal erectors and gastrocnemius*

1. Sit with the upper body nearly vertical and legs straight.
2. Lean forward from waist and grasp toes with each hand, slightly pull toes towards the upper body, and pull chest towards leg; hold for 10 seconds. (If you are very stiff, try to grasp the ankles.)
3. Release toes and relax foot.
4. Grasp ankles and continue to pull chest towards legs; hold for 10 seconds.
5. Still grasping the ankles, point away from body and continue to pull chest towards legs; hold for 10 seconds.

Stretching the hamstrings with emphasis on the middle portion.

Stretching the hamstrings with emphasis on the upper portion.

END

POSTERIOR OF THIGH

Semistraddle (Figure Four)

MUSCLE(S) AFFECTED: *gastrocnemius, hamstrings and spinal erectors*

1. Sit with the upper body nearly vertical and legs straight.
2. Place sole of left foot on left side of right knee. The lateral side of left leg should be resting on the floor.
3. Lean forward from the waist and grasp toes with right hand and slightly pull toes toward the upper body as the chest is also pulled toward right leg; hold for 10 seconds.
4. Release toes and relax foot.
5. Grasp ankle and continue to pull chest toward right leg; hold for 10 seconds.
6. Point toes away from body and continue to pull chest toward right leg; hold for 10 seconds.
7. Repeat with the left leg.

Stretching the hamstrings with emphasis on insertion of the hamstrings and calves

Stretching the hamstrings with emphasis on the middle portion

Stretching the hamstrings with emphasis on the upper portion

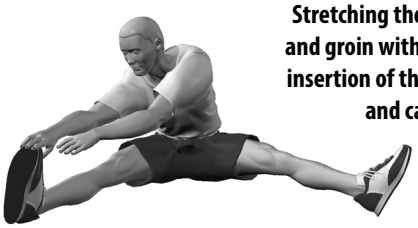

Stretching the hamstrings and groin with emphasis on insertion of the hamstrings and calves

Stretching the hamstrings and groin with emphasis on the middle portion

Stretching the hamstrings and groin with emphasis on the upper portion

Stretching the groin, low back and hamstrings

GROIN

Straddle (Spread Eagle)

MUSCLE(S) AFFECTED: *gastrocnemius, hamstrings, spinal erectors, adductors and sartorius*

1. Sit with the upper body nearly vertical and legs straight, and spread legs as far as possible.
2. With right hand, grasp toes of right foot and pull on toes slightly, while pulling chest toward right leg; hold for 10 seconds.
3. Release toes and relax foot.
4. Grasp ankle and continue to pull chest toward right leg; hold for 10 seconds.
5. Point toes away from body and continue to pull chest toward right leg; hold for 10 seconds.
6. Repeat process with the left leg.
7. Repeat process by grasping right toes with right hand and left toes with left hand. Move the torso forward and toward the ground.

URANCE®
by Body-Solid

Warm Up/Cool Down Exercises

GROIN

Butterfly

MUSCLE(S) AFFECTED: *adductors and sartorius*

1. Sitting with the upper body nearly vertical and legs straight, flex both knees as the soles of the feet come together.
2. Pull feet toward body.
3. Place hands on feet and elbows on legs.
4. Pull torso slightly forward as elbows push legs down; hold for 10 to 15 seconds.

Stretching the groin

Stretching calves without a step

POSTERIOR OF LOWER LEG

Bent-Over Toe Raise

MUSCLE(S) AFFECTED: *gastrocnemius and soleus*

1. Stand with heel of right foot 6 to 8 inches in front of left foot.
2. Flex right foot toward shin (dorsi-flexion) with heel in contact with floor.
3. Lean forward and try to touch right leg with chest while both legs are straight.
4. Continue to lean downward with upper body as the foot is dorsi-flexed near maximal toward the shin; hold for 10 to 15 seconds.
5. Repeat with the left leg.

POSTERIOR OF LOWER LEG

Step Stretch

MUSCLE(S) AFFECTED: *gastrocnemius and soleus; also, achilles tendon*

1. Have ready a step or board 3 to 4 inches high.
2. Place balls of both feet on the step or board, 1 inch from its edge.
3. With straight legs, lower heels as far as possible; hold for 10 to 15 seconds.
4. To stretch achilles tendon, raise heels slightly. Slightly flex the knees and then lower the heels. This stretch will be felt in the achilles tendon; hold for 10 to 15 seconds.
5. For a more intense and individualized stretch, perform this stretch with one leg at a time.

Stretching the calves standing on a step

Preparing to stretch the achilles tendon by slightly bending the knee

Stretching the achilles tendon by lowering the heel

HIPS

Forward Lunge (Fencer)

MUSCLE(S) AFFECTED: *iliopsoas, rectus femoris*

1. 1. Standing, take a long step forward (as with the lunge) with the right leg and flex the right knee until it is directly over the right foot.
2. Keep right foot flat on floor.
3. Keep back leg straight.
4. Keep back foot pointed in same direction as front foot; it is not necessary to have heel on floor.
5. Keep torso upright and rest hands on hips or front leg.
6. Slowly lower hips forward and downward; hold for 10 to 15 seconds.
7. Repeat with the left leg.

Stretching the hip flexors

Stretching the gluteals and hamstrings

HIPS

Supine Knee Flex

MUSCLE(S) AFFECTED: *hip extensors (gluteus maximus and hamstrings)*

1. Lie on back with legs straight.
2. Flex right leg and lift knee toward chest.
3. Place both hands below knee and continue to pull knee toward chest; hold for 10 to 15 seconds.
4. Repeat with left leg.

SHOULDER

Seated Lean-Back

MUSCLE(S) AFFECTED: *deltoids and pectoralis major*

1. Sitting with legs straight and arms extended, place palms on floor about 12 inches behind hips.
2. Point fingers away (backward) from body.
3. Slide hands backward and lean backward; hold for 10 seconds.

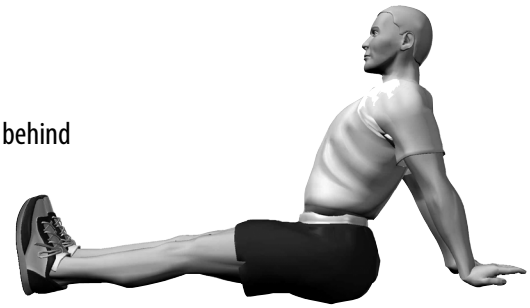

Stretching shoulder joints—sitting

Parts & Hardware List

Part#	Description	QTY
A	MAIN FRAME	1
B	UPRIGHT	1
C	VERTICAL SEATPOST	1
D	HORIZONTAL SEATPOST	1
E	LEFT HANDLE BAR	1
F	RIGHT HANDLE BAR	1
G	FOOT PEG	2
H	LINKAGE	2
R	LEFT CHAIN COVER	1
J	RIGHT CHAIN COVER	1
K	LEFT STEP CRANK	1
L	RIGHT STEP CRANK	1
M	FRONT STABILIZER	1
N	REAR STABILIZER	1
P	LEFT PEDAL	1
Q	RIGHT PEDAL	1
S	CONSOLE	1
1	LEFT CRANK	1
2	RIGHT CRANK	1
3	SEAT	1
4	ADJUSTABLE LEVELER	4
5	M8x20mm BUTTON HEAD CAP SCREW	6
6	M8 LOCK WASHER	6
7	M8 FLAT WASHER	6
8	M10x50mm HEX HEAD BOLT	2
9	TRANSPORT WHEEL	2

END

Parts & Hardware List

Part#	Description	QTY
10	M10 FLAT WASHER	8
11	M10 NYLON LOCK NUT	2
12	M8x25 FLAT HEAD CAP SCEW	4
13	ø35xø17x10mm BEARING	2
14	M8x45mm SHOULDER BOLT	2
15	M8 HEX NUT	2
16	ø22xø8X9mm BEARING	2
17	M8 NYLON LOCK NUT	2
18	M14 FLANGE NUT	2
19	ø22xø17x1mm WASHER	2
20	ø35xø17x10mm BEARING	6
21	HANDLE BAR PIVOT SHAFT	2
22	HANDLE GRIP	2
23	POP PIN	2
24	BUSHING	2
25	END CAP	1
26	M5x12mm SOCKET HEAD CAP SCREW	1
27	M8x15mm BUTTON HEAD CAP SCREW	1
28	ø35xø8.2X2mm FLAT WASHER	1
29	M5x10mm PHILLIPS SCREW	4
30	SPEED SENSOR CABLE	1
31	ø22 RETAINING RING	2
32	M20 HEX NUT	4
33	ø25xø17x0.3mm WAVE WASHER	5
34	AXLE	1
35	M5x8mm PHILLIPS SCREW	9

Parts & Hardware List

Part#	Description	QTY
36	M5 FLAT WASHER	3
37	LEFT SIDE CHAIN	1
38	M10 FLANGE NUT	2
39	TENSION BOLT	4
40	U BRACKET	4
41	M6 HEX NUT	4
42	M10 HEX NUT	4
43	ø16xø10x6mm SPACER	1
44	ø26xø10x8mm BEARING	4
45	M5x25mm BUTTON HEAD CAP SCREW	3
46	CHAIN WHEEL	1
47	HUB ASSEMBLY	1
48	M5 NYLON LOCK NUT	3
49	SPROCKETS	2
50	LOCK NUT	2
51	ø10x146mm SHAFT	1
52	M10 ACORN NUT	2
53	LEFT SHROUD	1
54	RIGHT SHROUD	1
55	LEFT COVER	1
56	RIGHT COVER	1
57	ø10x153mm SHAFT	1
58	ø16xø10x9mm SPACER	2
59	FAN WHEEL	1
60	RIGHT SIDE CHAIN	1
61	ø17 RETAINING RING	2

END

Note

Exploded Drawing

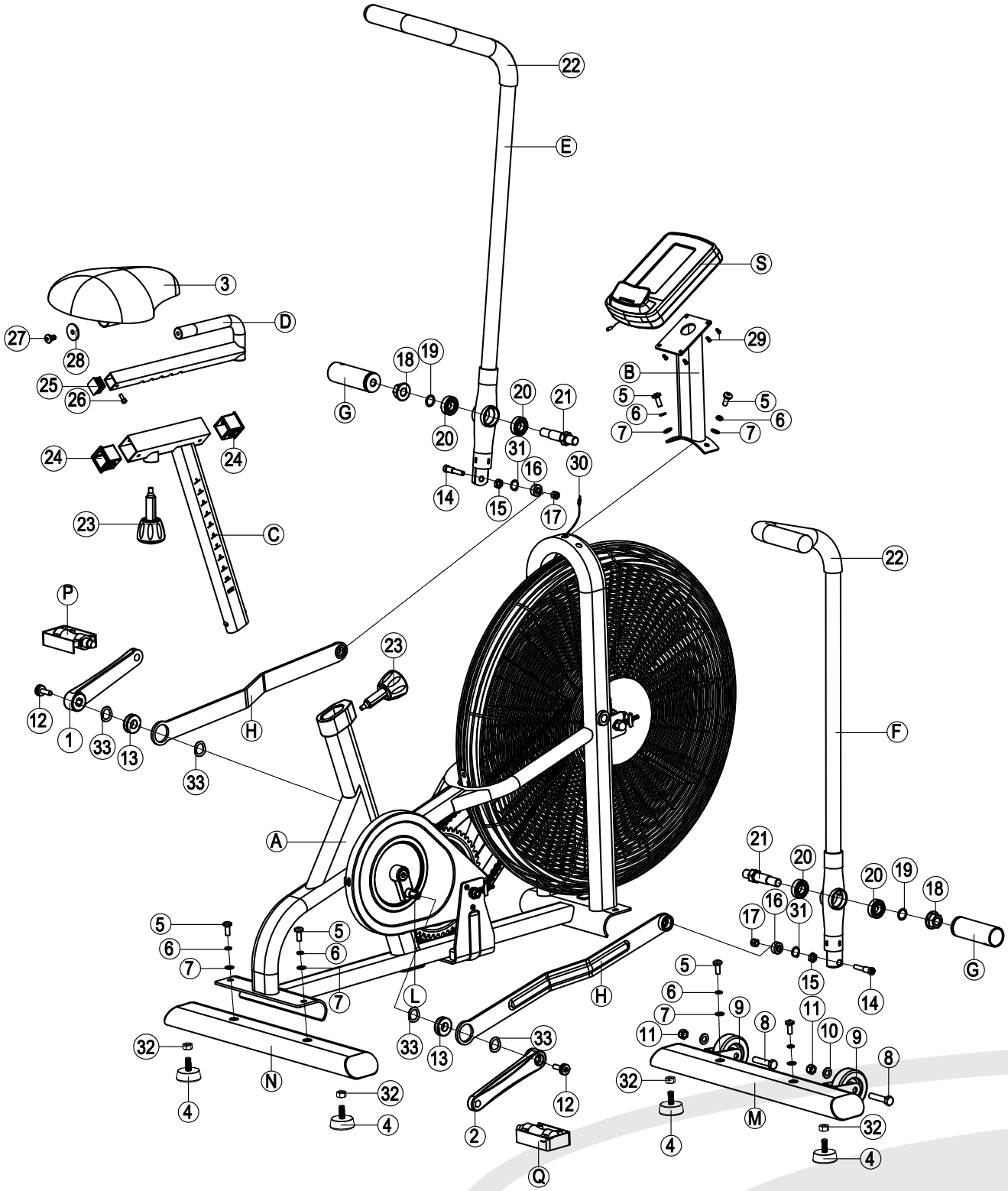

END

Exploded Drawing

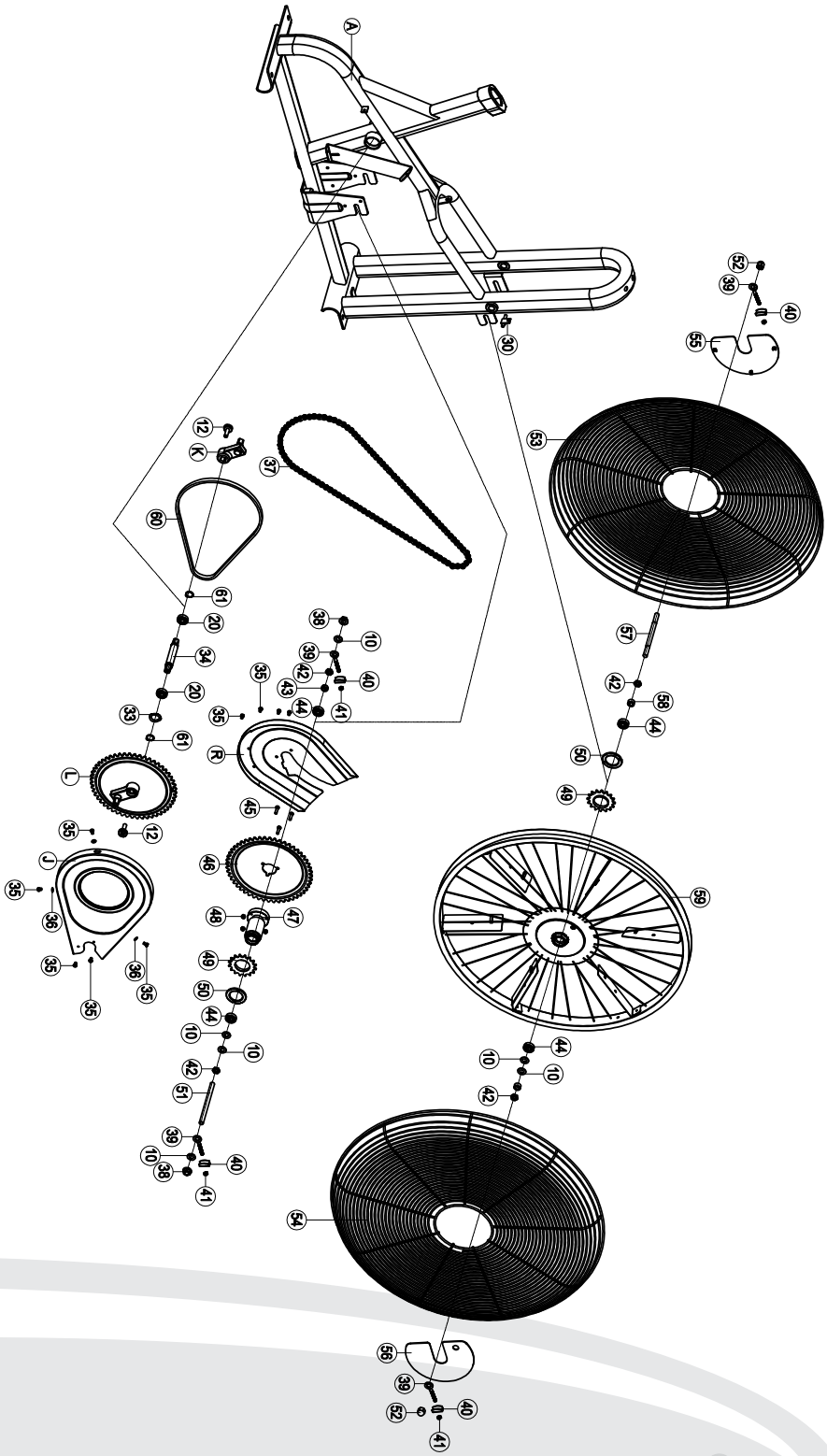

URANCE®
by Body-Solid

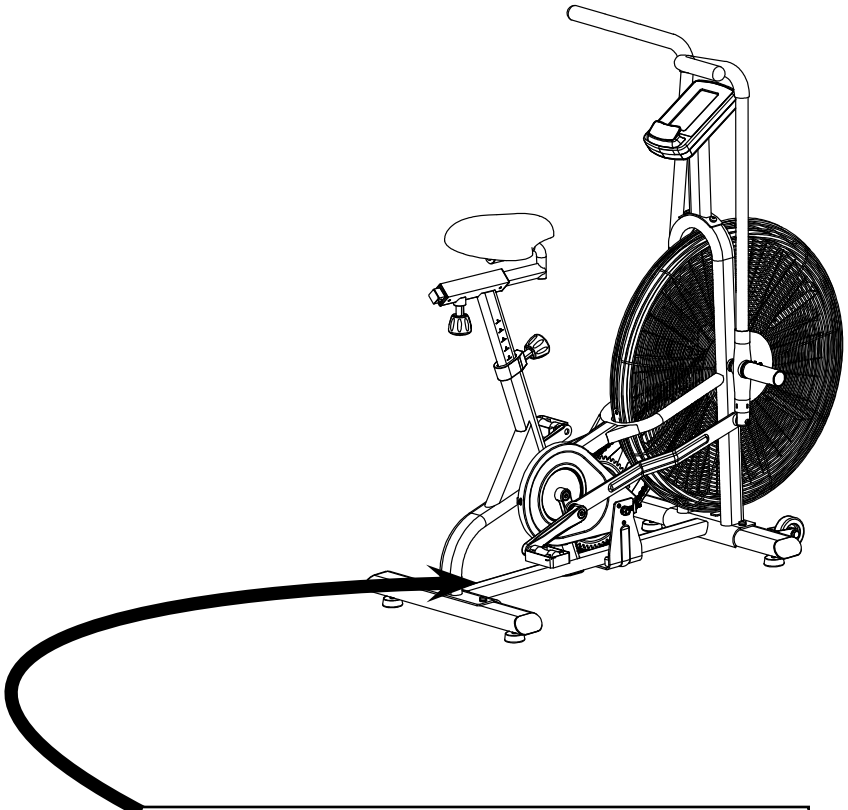

Serial Number is Located on the Frame

Model Name: FB300

Purchase Date: _____

Serial Number: _____

ENDURANCE® by Body-Solid

Customer Tech Support Hotline

Toll Free: 1-800-556-3113
Phone: 1-708-427-3555
Fax: 1-708-427-3556
Hours: M-F 8:30-5:00 CST
E-Mail: service@bodysolid.com